< CERTIFIED COPY OF ORIGINAL DOCUMENT >

SHARP

ErP TEST REPORT

Test Report No. E25-0143- A1

1. Test Equipment

Test Report No.	E25-0143- A1	
Date of Issue	2026/02/19	
Model Number	PN-LB653	
Brand	SHARP	
Category Type	Digital Interactive Whiteboard	
Serial No.	5D02578X	
Condition	Pre-Production	
Firmware Version	Ver. 0.1.43	
Rating: Input Voltage	100-240	Vac
Rating: Frequency	50/60	Hz
Customer/Applicant	Monitor Engineering Division II Smart Business Solutions BU Digital Imaging Solutions Business Unit Sharp Corporation 492 Minosho-Cho, Yamatokoriyama-Shi, Nara, 639-1186, JAPAN	

2. Test Result

ErP Directive: PASS (points A, B and C of Annex II of (EU) 2019/2021)

3. Notes

-This test report shall not be reproduced in full or partial, without the written approval of Sharp Nara Test Center.

-The results in this report should not be construed to imply compliance of equipment other than that which was tested.

-Measurement uncertainty is not considered into the judgment.

4. Signature

Test Date: 2026/02/13 (yyyy/mm/dd)

Tested by: K. Yoshida
Kohji Yoshida
Test Engineer

Issued Date: 2026/02/19 (yyyy/mm/dd)

Approved by: H, Noguchi
Hirofumi Noguchi
Technical Manager

Sharp Nara Test Center
492 Minosho-Cho, Yamatokoriyama-Shi, Nara, 639-1186, JAPAN
TEL: +81-50-5433-1797

〈 CERTIFIED COPY OF ORIGINAL DOCUMENT 〉

5. Test Configuration and Other Information

5.1. General Statement

Applicable Standards	No. (EU) 2019/2021 (Ecodesign Requirements for electronic displays)
Test Report Number	E25-0143- A1
Test Date	2026/02/13
Test Place	Energy Consumption Measuring Room
	492 Minosho-Cho, Yamatokoriyama-Shi, Nara, 639-1186, JAPAN
Test Engineer	Kohji Yoshida

5.2. Equipment

Model Number	PN-LB653
Other Information	
1) Configuration	EUT only (No Optional Equipment)
2) Photograph	Appendix A-1
3) Other Model	None

5.3. Test Parameters

Test Voltage	230	Vac
Test Frequency	50	Hz
Crest Factor	1.415	(Vcf)
Total Harmonic Distortion	0.011	%(Vthd)

Other Information

1) Measuring System	Appendix B-1
2) Instrument	Appendix B-2
3) Input Terminal for the Audio and Video Test Signals	HDMI
4) Automatic Brightness Control	None

5.4. Test Condition

Temperature:	23.8	℃
Humidity:	46.3	%

〈 CERTIFIED COPY OF ORIGINAL DOCUMENT 〉

6. Measurement Data

6.1 Standby mode Power Consumption

<Standby mode>

Requirements			Power consumption		Judgment
Annex Ⅱ, C.1 from 2021/03/01	0.50	W	0.46	W	PASS

Power Measurement Uncertainty

Requirements		Result		Judgment
0.125	W	0.029	W	PASS

<Networked Standby mode>

Requirements			Power consumption		Judgment
Annex Ⅱ, C.1 from 2021/03/01	2.00	W	1.07	W	PASS

Power Measurement Uncertainty

Requirements		Result		Judgment
0.088	W	0.021	W	PASS

Measurement Method: Sampling Method

Sampling Interval	0.5 sec
Total Duration	15 minutes
Stability Period	10 minutes

6.2 Off mode Power Consumption

<Off mode>

Requirements			Power consumption		Judgment
Annex Ⅱ, C.1 from 2021/03/01	0.30	W	0.00	W	PASS

Power Measurement Uncertainty

Requirements		Result		Judgment
0.020	W	0.000	W	PASS

Measurement Method: Sampling Method

Sampling Interval	0.5 sec
Total Duration	15 minutes
Stability Period	10 minutes

<Remark>
Standby mode, Networked Standby mode and Off mode measuring are performed in accordance with EN 50564:2011.The measurement time for the average measurement is 10 minutes.
(Total 15 minutes, the measurement data of the first 5 minutes is discarded.)
Method of shift to Standby or Off mode is as follows:
*Standby mode: During On state, the power button of the remote controller is pushed.
*Off mode: During On state, the main power switch of the display is turned off.

Method of shift to Networked Standby mode (Max condition)
Input: HDMI Network interface: LAN
Networked Standby mode Configuration：
Change Ethernet to "On" and Monitor Control via Network to "On".
After setting, the power button of the remote controller is pushed.
Then the display become Networked standby mode.
During network standby mode, It can be wake-up by LAN with Serial Command tool.

6.3 On mode Power Consumption

Requirements 4K resolution (65)			On Mode EEI	Judgment
Annex Ⅱ, A.1	<Visible Screen>			
	H:(dm)	14.285		
	V:(dm)	8.0352		
	A:H*V(dm²)	114.78		
	On Mode (W)	134.62		
from 2021/3/1	EEI max:	1.10	1.08	N/A
from 2023/3/1		0.90		N/A

〈 CERTIFIED COPY OF ORIGINAL DOCUMENT 〉

<HDR On mode Power Consumption>

Test mode	Measurement (W)
On mode for HDR with HDR10	-
On mode for HDR with HLG	-

<Remark>
The On mode measuring was performed in accordance with EN 62087-7:2019.
The “Average Power Approach” was used for calculation of the power consumption.
After warming up of one hour, and then switching to the On mode, and measurements were made at least 15 minutes.
The measurement time for the average measurement was 10 minutes.
*Used Signal: Dynamic Broadcast video sequence according to EN 62087-2:2016.
Input Terminal HDMI

6.4 Peak Luminance Ratio
(Annex II B.3. of (EU) 2019/2021)
Peak white luminance no be less than 220 cd/m2.

Delivered Luminance: (cd/㎡)	Requirement (cd/㎡)	Judgment
442.7	220.0	N/A

Maximum Luminance: (cd/㎡)	Delivered Luminance: (cd/㎡)	Ratio		
		Requirement	Measurement	Judgment
511.4	442.7	65%	87%	N/A

*Used Signal : Box and outline test pattern according to EN 62087-2:2016.

*Maximum Luminance Mode:

Backlight 100, Thru
Input Select
HDMI

6.5 Automatic standby in displays

Other electronic displays than televisions and broadcast displays:
The measured value of the time before the electronic display automatically reaches standby, or off- mode, or another condition which does not exceed the applicable power consumption requirements for off mode and/or standby mode when no input is detected:
Measurement Time (MM:SS): 1:12

6.6 Reference Data
<Networked Standby mode> Pre-measurement

Requirement		Input	Mode	Network	Power Save Mode	Result(W)
Annex Ⅱ, C.1 from 2021/03/01	2.00 W	-	-	-	-	-
		-	-	-	-	-
		HDMI	Low Power	LAN	Power Save Mode ON	1.0689
		HDMI	Low Power	RS-232C	Power Save Mode ON	0.4810
		-	-	-	-	-
		-	-	-	-	-
		USB Type-C	Low Power	LAN	Power Save Mode ON	1.0681
		HDMI	Low Power	HDMI (CEC)	Power Save Mode ON	0.4104
		-	-	-	-	-

〈 CERTIFIED COPY OF ORIGINAL DOCUMENT 〉

Appendix A-1 (Photograph)







Appendix B-1 (Measuring System)

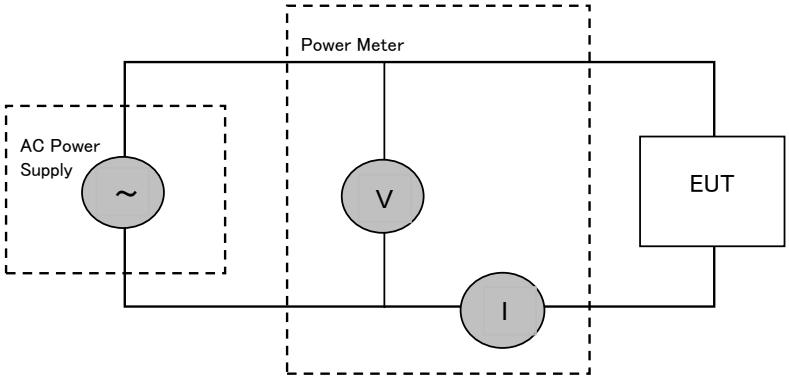

Appendix B-2 (Instrument)

No.	Instrument	Model	Manufacturer	Serial No.	Calibration Date	Calibration Due Date
1	Power Meter	WT3000	YOKOGAWA	91M920204	2025/06/09	2026/06/30
2	AC Power Supply	PCR8000L	KIKUSUI	-	-	-
3	PC	TPC-W058-MT	HP	8CG02114SN	-	-
4	Luminance Meter	SR-LEDW	TOPCON	11100024	2025/2/5	2026/2/28
5	Stop Watch	S058-4000	SEIKO	850002	2025/01/06	2027/01/31

< CERTIFIED COPY OF ORIGINAL DOCUMENT >

SHARP

RECORDS OF REVISION

Test Report Number	Issued Date	Summary		Validity
		Page		
E25- 0143 - A1	2026/02/19	---	(Original)	Yes

Note: Only Test Report Number which is described as Yes above is valid.

End of Report